Cambridge Assessment International Education

Cambridge International AS & A Level

CANDIDATE NAME									
CENTRE NUMBER						CANDIDATE NUMBER				

3086046234

PHYSICS **9702/21**

Paper 2 AS Level Structured Questions **May/June 2023**

1 hour 15 minutes

You must answer on the question paper.

No additional materials are needed.

INSTRUCTIONS

- Answer **all** questions.
- Use a black or dark blue pen. You may use an HB pencil for any diagrams or graphs.
- Write your name, centre number and candidate number in the boxes at the top of the page.
- Write your answer to each question in the space provided.
- Do **not** use an erasable pen or correction fluid.
- Do **not** write on any bar codes.
- You may use a calculator.
- You should show all your working and use appropriate units.

INFORMATION

- The total mark for this paper is 60.
- The number of marks for each question or part question is shown in brackets [ ].

This document has **20** pages. Any blank pages are indicated.

© UCLES 2023

Data

acceleration of free fall	g	=	$9.81\ \text{m s}^{-2}$
speed of light in free space	c	=	$3.00 \times 10^{8}\ \text{m s}^{-1}$
elementary charge	e	=	$1.60 \times 10^{-19}\ \text{C}$
unified atomic mass unit	1 u	=	$1.66 \times 10^{-27}\ \text{kg}$
rest mass of proton	m_p	=	$1.67 \times 10^{-27}\ \text{kg}$
rest mass of electron	m_e	=	$9.11 \times 10^{-31}\ \text{kg}$
Avogadro constant	N_A	=	$6.02 \times 10^{23}\ \text{mol}^{-1}$
molar gas constant	R	=	$8.31\ \text{J K}^{-1}\ \text{mol}^{-1}$
Boltzmann constant	k	=	$1.38 \times 10^{-23}\ \text{J K}^{-1}$
gravitational constant	G	=	$6.67 \times 10^{-11}\ \text{N m}^2\ \text{kg}^{-2}$
permittivity of free space	ε_0	=	$8.85 \times 10^{-12}\ \text{F m}^{-1}$
	$\left(\frac{1}{4\pi\varepsilon_0}\right.$	=	$\left.8.99 \times 10^{9}\ \text{m F}^{-1}\right)$
Planck constant	h	=	$6.63 \times 10^{-34}\ \text{J s}$
Stefan–Boltzmann constant	σ	=	$5.67 \times 10^{-8}\ \text{W m}^{-2}\ \text{K}^{-4}$

Formulae

uniformly accelerated motion	s	=	$ut + \frac{1}{2}at^2$
	v^2	=	$u^2 + 2as$
hydrostatic pressure	Δp	=	$\rho g \Delta h$
upthrust	F	=	$\rho g V$
Doppler effect for sound waves	f_o	=	$\frac{f_\text{s} v}{v \pm v_\text{s}}$
electric current	I	=	$Anvq$
resistors in series	R	=	$R_1 + R_2 + \ldots$
resistors in parallel	$\frac{1}{R}$	=	$\frac{1}{R_1} + \frac{1}{R_2} + \ldots$

© UCLES 2023

1 **(a)** **(i)** Define power.

.....

..... [1]

(ii) Use the definition of power to show that the SI base units of power are $kg\,m^2\,s^{-3}$.

[1]

(b) The intensity I of a sound wave moving through a gas is given by

$$I = f^2A^2vk$$

where f is the frequency of the wave,
A is the amplitude of the wave,
v is the speed of the wave
and k is a constant that depends on the gas.

Determine the SI base units of k.

SI base units ..... [3]

[Total: 5]

2 A rigid uniform beam of weight W is connected to a fixed support by a hinge, as shown in Fig. 2.1.

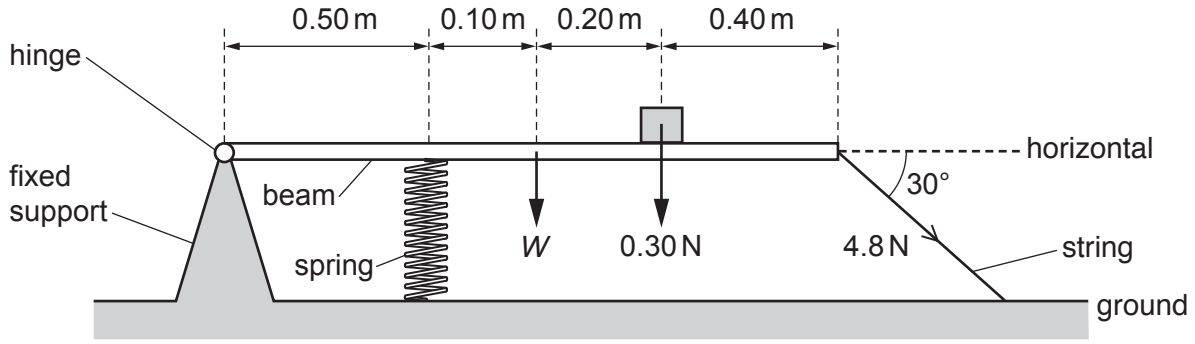

Fig. 2.1 (not to scale)

A compressed spring exerts a total force of 8.2 N vertically upwards on the horizontal beam. A block of weight 0.30 N rests on the beam. The right-hand end of the beam is connected to the ground by a string at an angle of 30° to the horizontal. The tension in the string is 4.8 N. The distances along the beam are shown in Fig. 2.1.

The beam is in equilibrium. Assume that the hinge is frictionless.

(a) (i) Show that the vertical component of the tension in the string is 2.4 N.

[1]

(ii) By taking moments about the hinge, determine the weight W of the beam.

W = ... N [3]

(iii) Calculate the horizontal component of the force exerted on the beam by the hinge.

force = ... N [1]

© UCLES 2023

(b) The spring obeys Hooke's law and has an elastic potential energy of 0.32 J.

Calculate the compression of the spring.

compression = ... m [2]

(c) The string is cut so that the spring extends upwards. This causes the beam to rotate and launch the block into the air. The block reaches its maximum height and then falls back to the ground.

Fig. 2.2 shows part of the path of the block in the air shortly before it hits the horizontal ground.

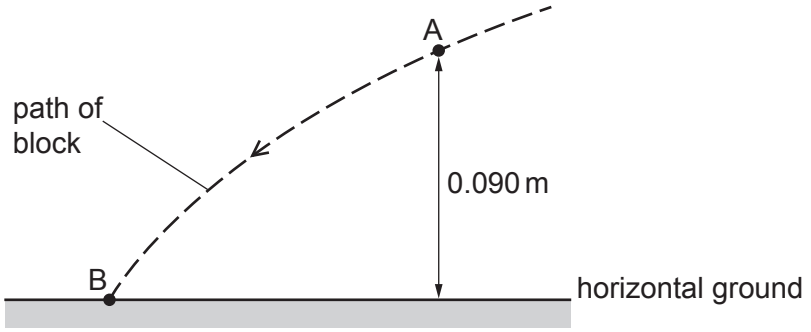

Fig. 2.2 (not to scale)

The block is at a height of 0.090 m above the ground when it passes through point A. The block has a kinetic energy of 0.044 J when it hits the ground at point B.
Air resistance is negligible.

(i) Calculate the decrease in the gravitational potential energy of the block for its movement from A to B.

decrease in gravitational potential energy = ... J [2]

(ii) Use your answer in **(c)(i)** and conservation of energy to determine the speed of the block at point A.

speed = ... $m\,s^{-1}$ [3]

(iii) By reference to the force on the block, explain why the horizontal component of the velocity of the block remains constant as it moves from A to B.

.....

..... [1]

(iv) The block passes through point A at time t_A and arrives at point B at time t_B.

On Fig. 2.3, sketch a graph to show the variation of the magnitude of the vertical component v_Y of the velocity of the block with time t from $t = t_A$ to $t = t_B$.
Numerical values of v_Y are not required.

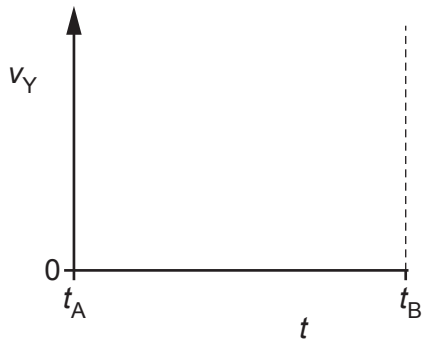

Fig. 2.3

[1]

[Total: 14]

3 A block is pulled in a straight line along a rough horizontal surface by a varying force X, as shown in Fig. 3.1.

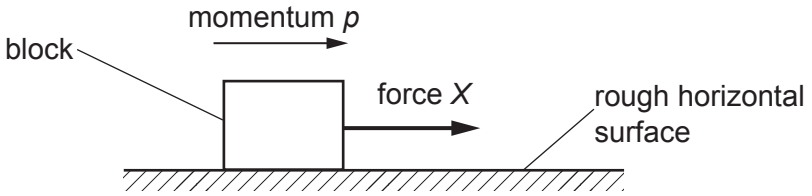

Fig. 3.1

Air resistance is negligible. Assume that the frictional force exerted on the block by the surface is constant and has magnitude 2.0 N.

The variation with time t of the momentum p of the block is shown in Fig. 3.2.

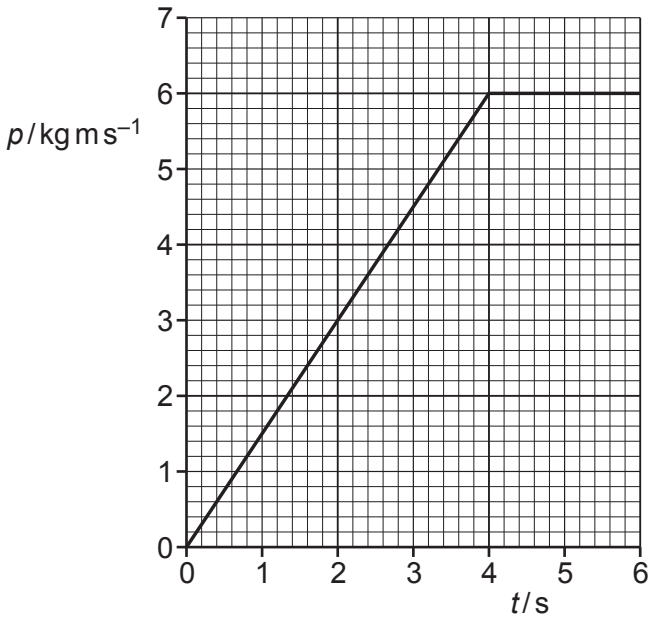

Fig. 3.2

(a) State Newton's second law of motion.

.....

..... [1]

(b) Use Fig. 3.2 to determine, for the block at time $t = 2.0\,s$, the magnitude of:

(i) the resultant force on the block

resultant force = ... N [1]

(ii) the force X.

X = ... N [1]

(c) On Fig. 3.3, sketch a graph to show the variation of force X with time t from $t = 0$ to $t = 6.0\,s$.

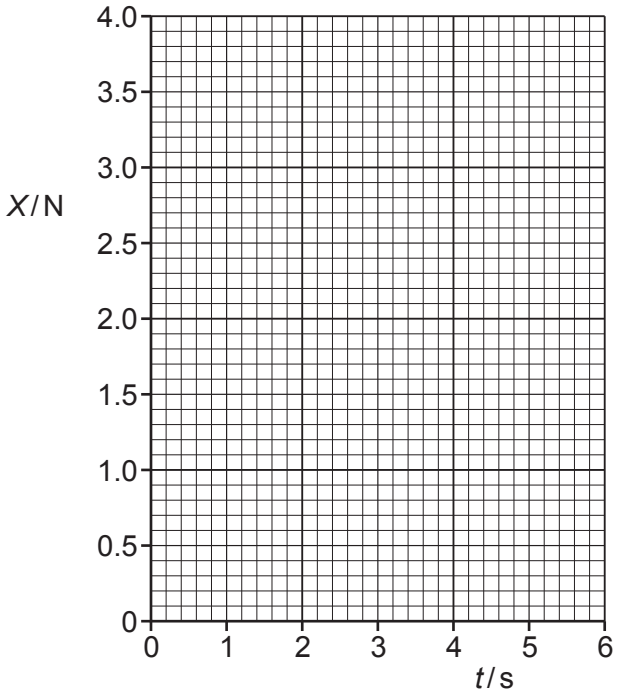

Fig. 3.3

[3]

[Total: 6]

BLANK PAGE

© UCLES 2023

4 A beaker in air contains a liquid. The base of the beaker is in contact with the liquid and has area A, as shown in Fig. 4.1.

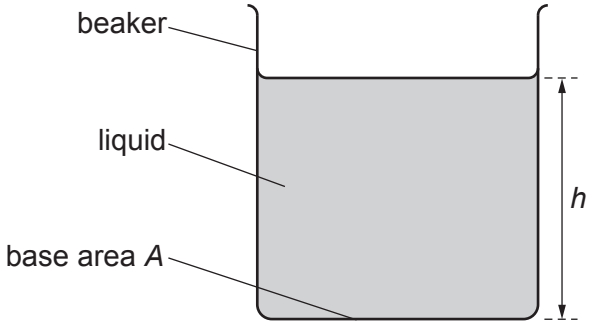

Fig. 4.1

The liquid has density ρ and fills the beaker to a depth h.

(a) By using the definitions of pressure and density, show that

$$p = \rho g h$$

where p is the pressure due to the liquid that is exerted on the base of the beaker and g is the acceleration of free fall.

[3]

(b) Suggest why the equation in **(a)** does not give the total pressure on the base of the beaker.

.....

..... [1]

(c) Fig. 4.2 shows the variation of the total pressure inside the liquid with depth x below the surface.

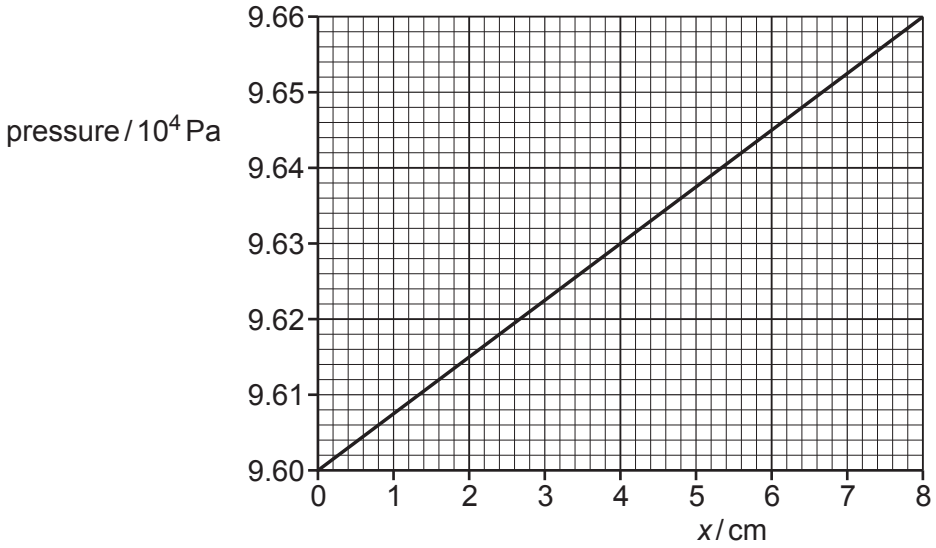

Fig. 4.2

Determine the density of the liquid.

density = ... kg m^{-3} [2]

© UCLES 2023

(d) A solid cylinder is held stationary by a wire so that the base of the cylinder is level with the surface of the liquid, as shown in Fig. 4.3.

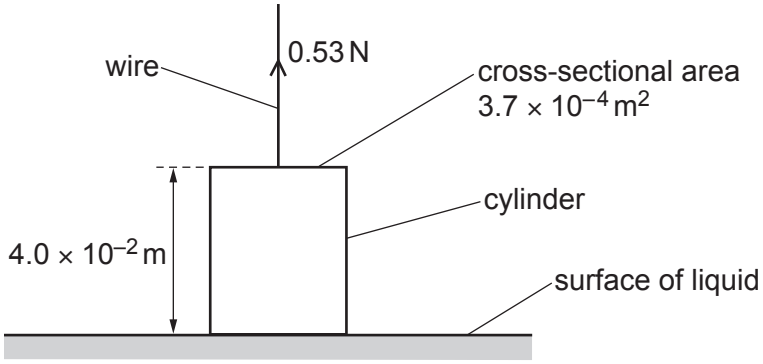

Fig. 4.3 (not to scale)

The cylinder has length 4.0×10^{-2} m and cross-sectional area 3.7×10^{-4} m^2. The tension in the wire is 0.53 N.

The cylinder is now lowered and then held stationary by the wire so that the top of the cylinder is level with the surface of the liquid.

Calculate the new tension in the wire.

tension = ... N [2]

[Total: 8]

5 **(a)** An electromagnetic wave in a vacuum has a wavelength of 8.4×10^{-6} m.

(i) State the name of the principal region of the electromagnetic spectrum for the wave.

..... [1]

(ii) Calculate the frequency, in THz, of the wave.

frequency = ... THz [2]

(b) An arrangement that uses a double slit to demonstrate the interference of light from a laser is shown in Fig. 5.1.

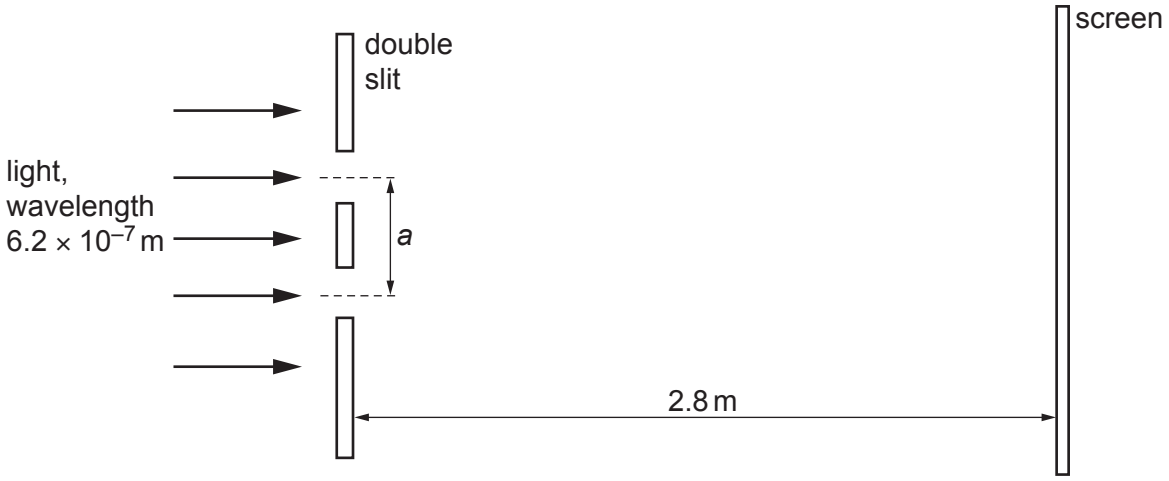

Fig. 5.1 (not to scale)

The light from the laser has a wavelength of 6.2×10^{-7} m and is incident normally on the slits. The separation of the two slits is *a*. The slits and screen are parallel and separated by a distance of 2.8 m.

An interference pattern of bright fringes and dark fringes is formed on the screen. The distance on the screen across 8 bright fringes is 22 mm, as illustrated in Fig. 5.2.

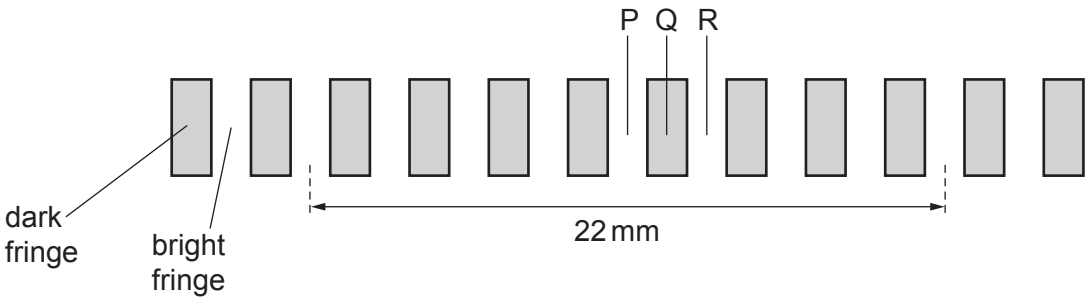

Fig. 5.2

© UCLES 2023

(i) The light waves emerging from the two slits are coherent.

State what is meant by coherent.

.....

..... [1]

(ii) Calculate the separation *a* of the slits.

a = ... m [3]

(c) Fringe P is the central bright fringe of the interference pattern in **(b)**. Fringe Q and fringe R are the nearest dark fringe and the nearest bright fringe respectively to the right of fringe P, as shown in Fig. 5.2.

(i) Calculate the difference in the distances (the path difference) from each slit to the centre of fringe Q.

difference in the distances = ... m [1]

(ii) State the phase difference between the light waves meeting at the centre of fringe R.

phase difference = ...° [1]

[Total: 9]

BLANK PAGE

6 A metal wire in a circuit has a length of 1.8 m and a cross-sectional area of $1.5 \times 10^{-6}\,m^2$. The total number of free electrons (charge carriers) in the wire is 2.3×10^{23}.

There is a current in the wire so that a charge of 172 C moves past a fixed point in the wire in a time of 2.5 minutes.

(a) Show that the number density of the free electrons in the wire is $8.5 \times 10^{28}\,m^{-3}$.

[1]

(b) Calculate the average drift speed of the free electrons.

average drift speed = ... $m\,s^{-1}$ [3]

[Total: 4]

7 A battery of electromotive force (e.m.f.) 9.6 V and negligible internal resistance is connected in series with two fixed resistors and a thermistor, as shown in Fig. 7.1.

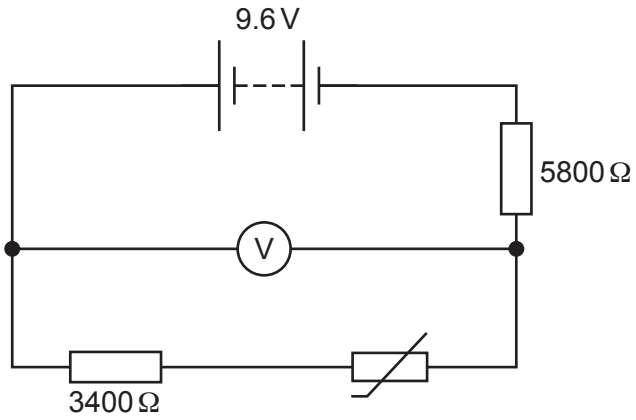

Fig. 7.1

The fixed resistors have resistances of 3400 Ω and 5800 Ω. The reading on the voltmeter in the circuit is 6.0 V.

(a) Calculate the current in the resistor of resistance 5800 Ω.

current = ...A [2]

(b) Calculate the resistance of the thermistor.

resistance = ... Ω [2]

© UCLES 2023

(c) The initial energy stored in the battery is 2.6×10^4 J.

Assume that the e.m.f. of the battery is constant.

Determine the final energy stored in the battery after a charge of 330 C has moved through it.

final stored energy = ... J [2]

(d) The environmental conditions change causing an increase in the resistance of the thermistor.

State whether there is a decrease, increase or no change to:

(i) the temperature of the thermistor

..... [1]

(ii) the current in the thermistor

..... [1]

(iii) the potential difference across the thermistor.

..... [1]

[Total: 9]

8 An isolated stationary nucleus X decays by emitting an α-particle to form a nucleus Y.

Nucleus Y and nucleus Z are isotopes of the same element.

(a) By comparing the number of protons in each nucleus, state and explain whether the charge of nucleus Y is less than, greater than or the same as the charge of:

(i) nucleus Z

.....

..... [1]

(ii) nucleus X.

.....

.....

..... [2]

(b) Use the principle of conservation of momentum to explain why nucleus Y cannot be stationary immediately after the decay of nucleus X.

.....

.....

.....

..... [2]

[Total: 5]

Permission to reproduce items where third-party owned material protected by copyright is included has been sought and cleared where possible. Every reasonable effort has been made by the publisher (UCLES) to trace copyright holders, but if any items requiring clearance have unwittingly been included, the publisher will be pleased to make amends at the earliest possible opportunity.

To avoid the issue of disclosure of answer-related information to candidates, all copyright acknowledgements are reproduced online in the Cambridge Assessment International Education Copyright Acknowledgements Booklet. This is produced for each series of examinations and is freely available to download at www.cambridgeinternational.org after the live examination series.

Cambridge Assessment International Education is part of Cambridge Assessment. Cambridge Assessment is the brand name of the University of Cambridge Local Examinations Syndicate (UCLES), which is a department of the University of Cambridge.

© UCLES 2023